PACKAGING

Lag 1

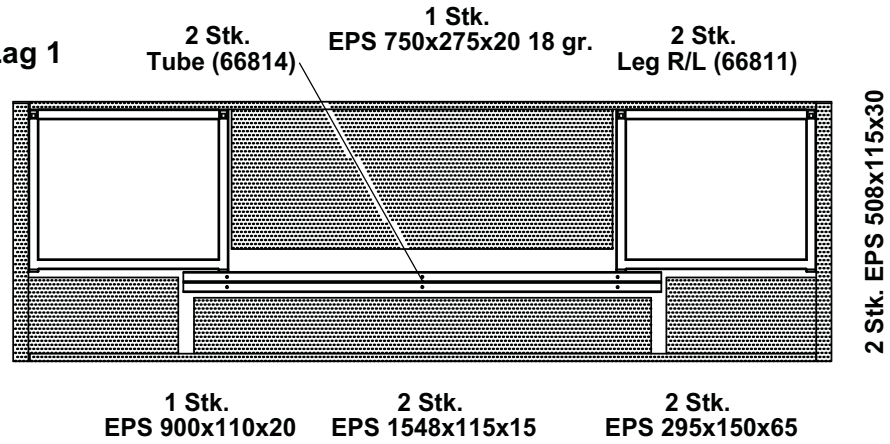

Lag 2

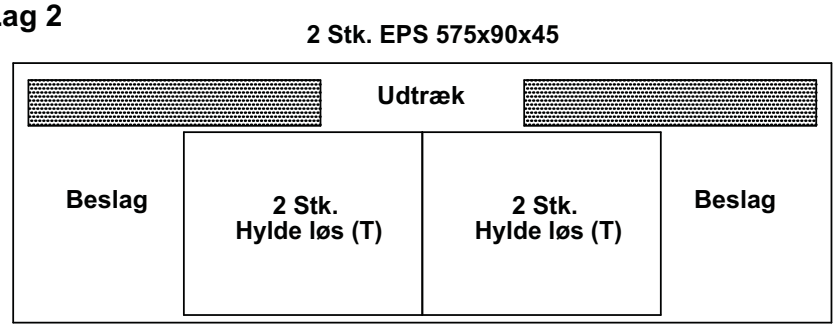

Lag 3

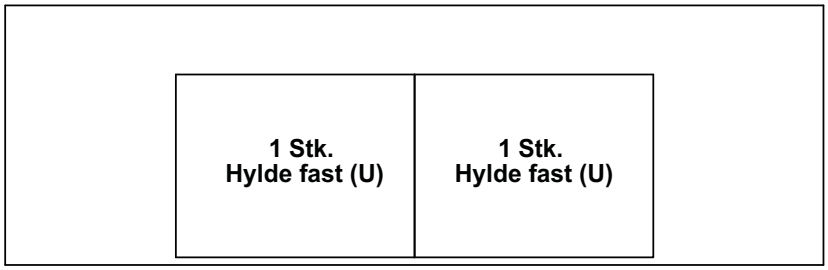

Note til pakkebånd:

Samlevejledning

Beslag se beslagsliste

Rulleudtræk se beslagsliste

Rev.	Latest Revision / Description
B	24-05-2019 JR: Indv. mål ændret fra 1611x481x116 til1611x511x116. Nyt EPS i kassen.

Cardboard closure	Packaging type	Thickness of board / Composition of quality
A - Sideluk	C - 30 mm end/15 mm side	3 mm (B-flute, brown) / Min.: ECT 3,9 - Mul 350

INSIDE MEASURE	L:	1611	B:	511	H:	116	Glue flap:	45	Measurements shown in mm.	BOX:	1 of 2	PAGE:	1/2

tvilum

88201

Vitrine 2 rammelåger + 3 skuffer

Stubbe

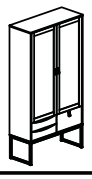

INIT:	JR	DATE :	11-04-2019
REVISION:	B	Approved by:	JR
DWG.NO.	88201-60		

PACKAGING

Note til pakkebånd:

Lag 4

2 Stk. Bagklædning (10092)

Lag 5

1 Stk. EPS 1500x75x44

1 Stk. Skillerum (GA)

Lag 6

1 Stk. Side venstre (FA)

Lag 7

1 Stk. Side højre (HA)

Rev.	Latest Revision / Description
B	24-05-2019 JR: Indv. mål ændret fra 1611x481x116 til1611x511x116. Nyt EPS i kassen.

Cardboard closure	Packaging type	Thickness of board / Composition of quality
A - Sideluk	C - 30 mm end/15 mm side	3 mm (B-flute, brown) / Min.: ECT 3,9 - Mul 350

INSIDE MEASURE	L:	1611	B:	511	H:	116	Glue flap:	45	Measurements shown in mm.	BOX:	1 of 2	PAGE:	2/2

tvilum

88201

Vitrine 2 rammelåger + 3 skuffer

Stubbe

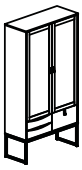

INIT:	JR	DATE :	11-04-2019
REVISION:	B	Approved by:	JR
DWG.NO.	88201-60		

PACKAGING

Note til pakkebånd:

Lag 1

Lag 2

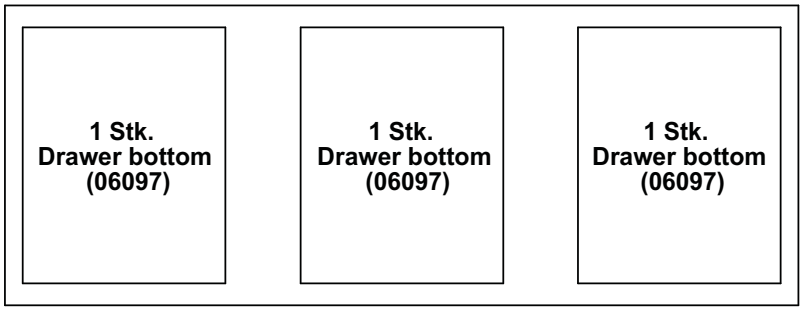

Lag 3

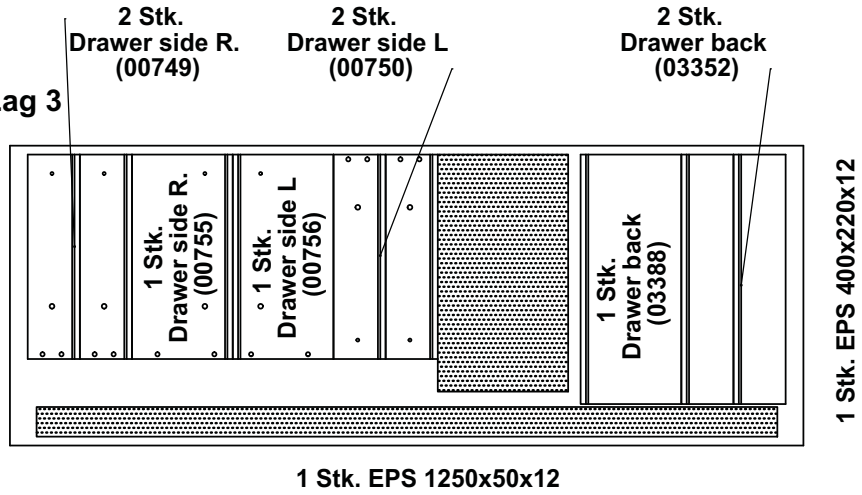

Rev.	Latest Revision / Description									
B	24-05-2019 JR: Indv. mål ændret fra 1339x476x78 til 1339x506x78. Nyt EPS i kassen.									
Cardboard closure	Packaging type				Thickness of board / Composition of quality					
A - Sideluk	C - 30 mm end/15 mm side				3 mm (B-flute, brown) / Min.: ECT 3,9 - Mul 350					
INSIDE MEASURE	L:	1339	B:	506	H:	78	Glue flap:	45	Measurements shown in mm.	BOX: 2 of 2	PAGE:1/2

tvilum	Vitrine 2 rammelåger + 3 skuffer	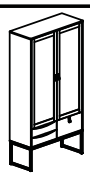	INIT:	JR	DATE : 11-04-2019
	Stubbe		REVISION:	B	Approved by: JR
88201			DWG.NO.		88201-60

PACKAGING

Lag 4

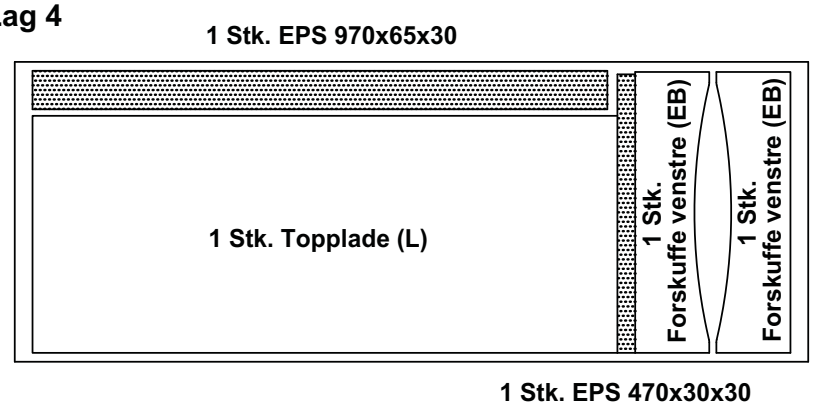

Lag 5

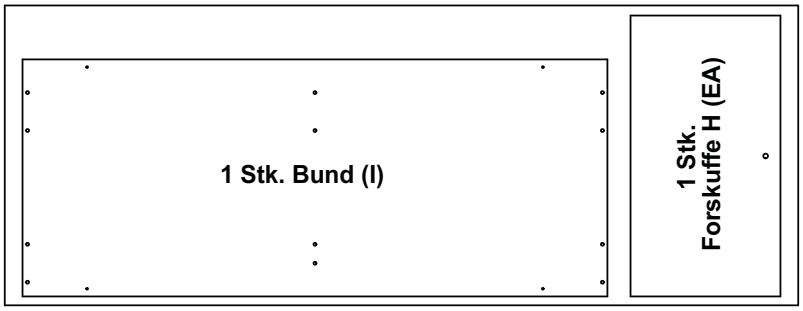

Note til pakkebånd:

Rev.	Latest Revision / Description
B	24-05-2019 JR: Indv. mål ændret fra 1339x476x78 til 1339x506x78. Nyt EPS i kassen.

Cardboard closure	Packaging type	Thickness of board / Composition of quality
A - Sideluk	C - 30 mm end/15 mm side	3 mm (B-flute, brown) / Min.: ECT 3,9 - Mul 350

INSIDE MEASURE	L:	1339	B:	506	H:	78	Glue flap:	45	Measurements shown in mm.	BOX:	2 of 2	PAGE:	2/2

tvilum

88201

Vitrine 2 rammelåger + 3 skuffer

Stubbe

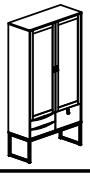

INIT:	JR	DATE :	11-04-2019
REVISION:	B	Approved by:	*JR*
DWG.NO.	88201-60		