PALLETIZING

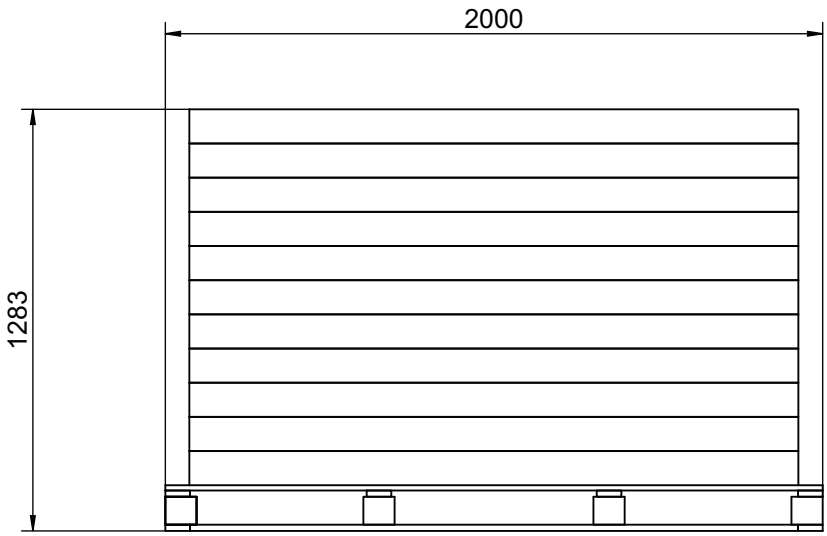

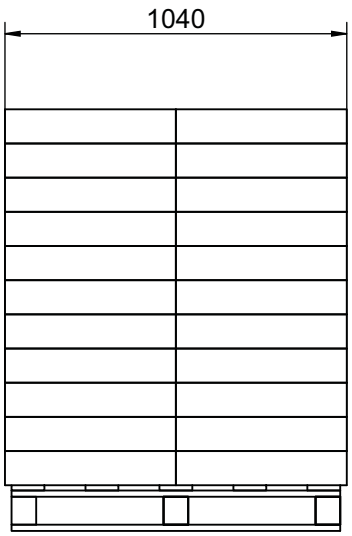

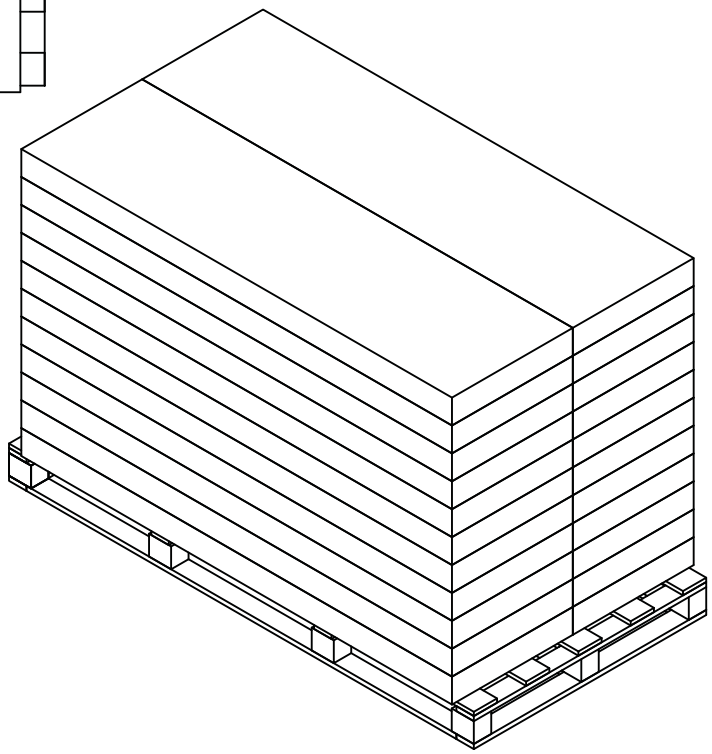

Rev.	Latest Revision / Description
B	Delta er ændret til Oslo.

Item number	Component	Pcs.	L	W	T	Gross weight in kg	Net weight in kg
089154	Palle, TS12A, Special.	1	2000	1000	139		
Box 1 of 1		22	1853	520	104	39,4	37,9

tvilum

75461

Vitrine 1 låge

Oslo

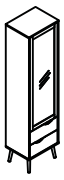

INIT:	**JR**	**DATE :**	**16-03-2017**
REVISION:	**B**	**Approved by:**	***JR***
DWG.NO.	**75461-70**		