PACKAGING

Note til pakkebånd:

Samlevejledning

Lag 1

1 Stk. EPS 700x63x20

2 Stk. EPS 400x165x20

Lag 2

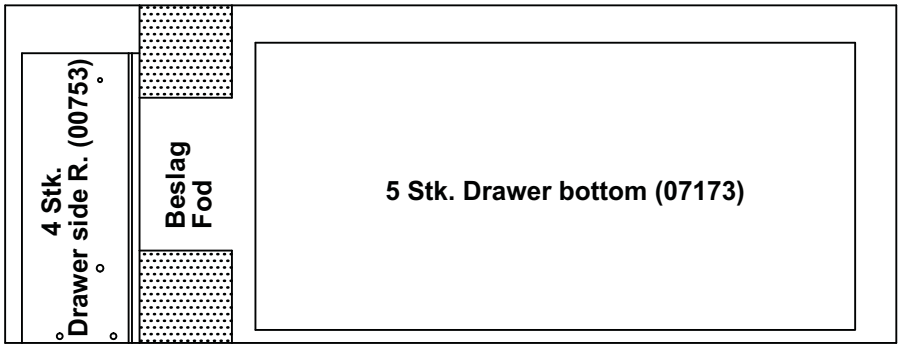

2 Stk. EPS 130x110x110

Beslag se beslagsliste

Fod se beslagsliste

Lag 3

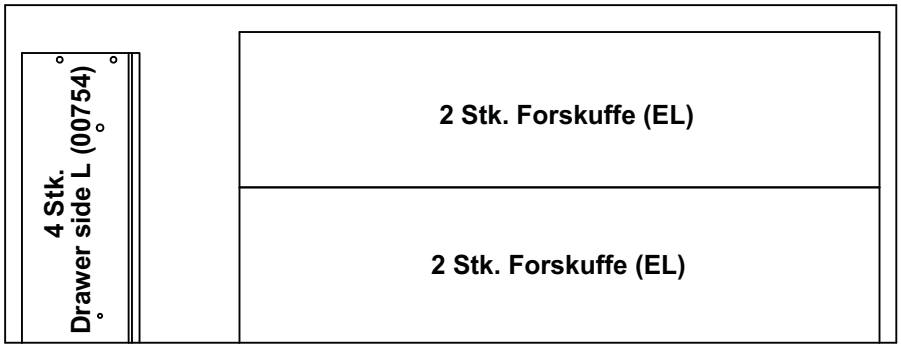

Rev.	Latest Revision / Description
C	30-11-2018 JR (Mia): EPS 1000x30x18 er fjernet.

Cardboard closure	Packaging type	Thickness of board / Composition of quality
A - Sideluk	**B - 20 mm end protection**	**3 mm (B-flute, brown) / Min.: ECT 3,9 - Mul 350**

INSIDE MEASURE	L:	1061	B:	402	H:	166	Glue flap:	45	Measurements shown in mm.	BOX:	1 af 1	PAGE:	1/3

tvilum	**Kommode 5 skuffer**		INIT:	JR	DATE : 01-12-2014
	Nova		REVISION:	C	Approved by: *JR*
71200			DWG.NO.		71200-60

PACKAGING

Lag 4

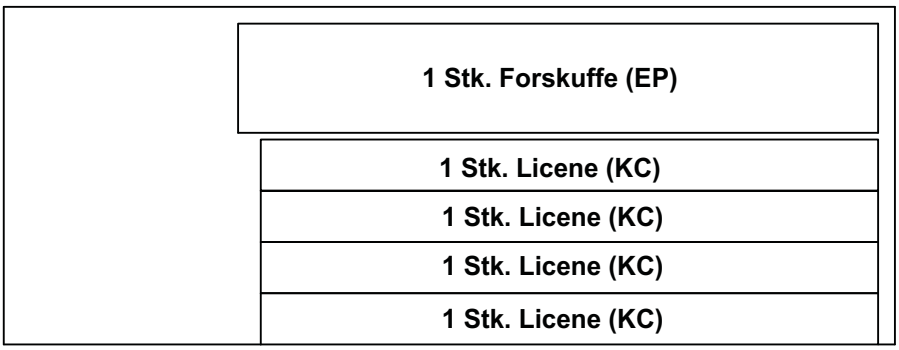

Note til pakkebånd:

Lag 5

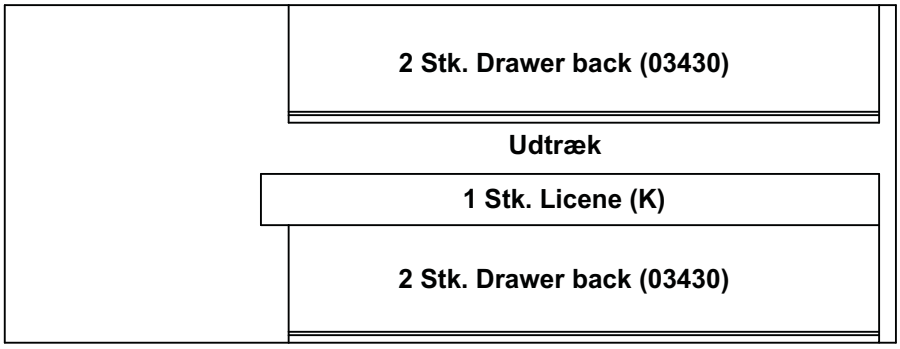

Kugleudtræk se beslagsliste

Lag 6

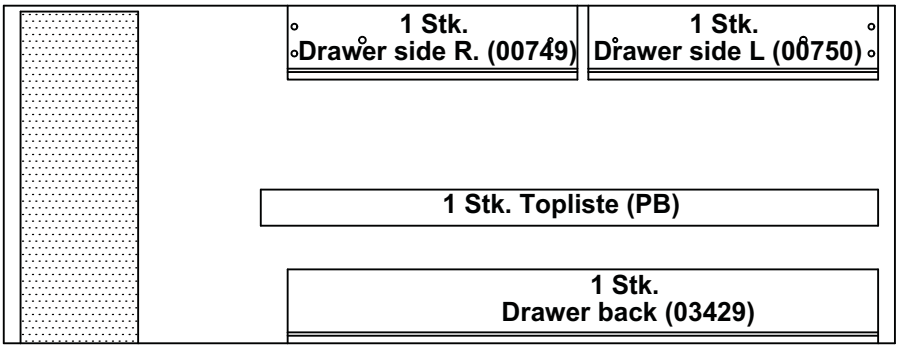

1 Stk.
EPS 395x140x33

Rev.	Latest Revision / Description
C	30-11-2018 JR (Mia): EPS 1000x30x18 er fjernet.

Cardboard closure	Packaging type	Thickness of board / Composition of quality
A - Sideluk	B - 20 mm end protection	3 mm (B-flute, brown) / Min.: ECT 3,9 - Mul 350

INSIDE MEASURE	L:	1061	B:	402	H:	166	Glue flap:	45	Measurements shown in mm.	BOX:	1 af 1	PAGE:	2/3

tvilum

71200

Kommode 5 skuffer

Nova

INIT:	JR	DATE :	01-12-2014
REVISION:	C	Approved by:	JR
DWG.NO.	71200-60		

PACKAGING

Note til pakkebånd:

Lag 7

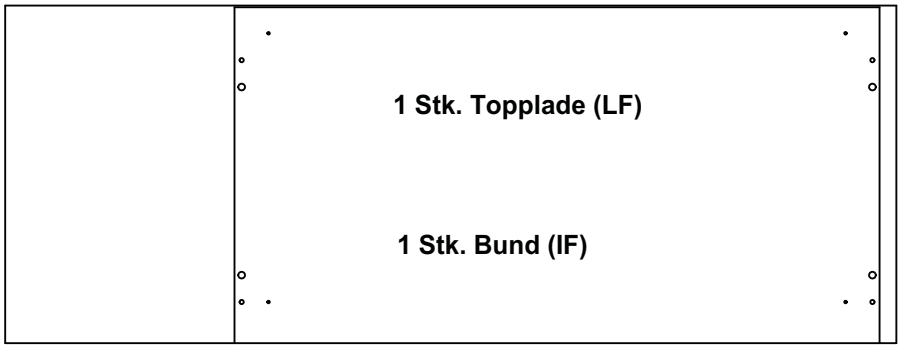

Lag 8

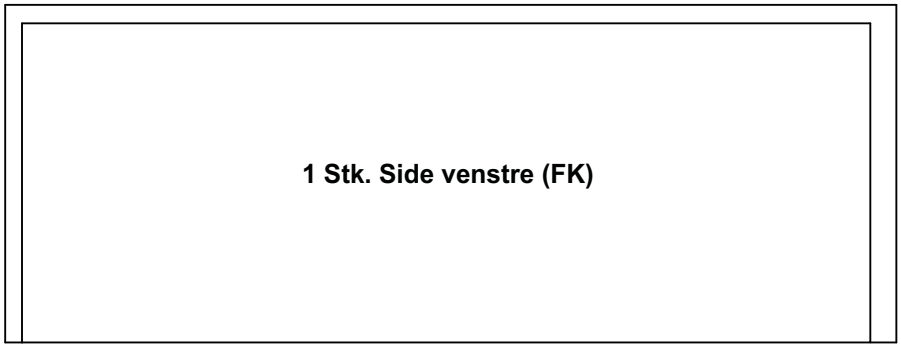

Lag 9

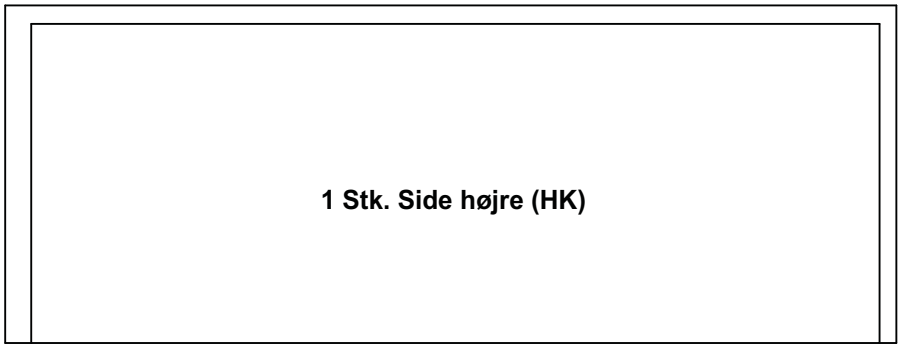

Rev.	Latest Revision / Description
C	30-11-2018 JR (Mia): EPS 1000x30x18 er fjernet.

Cardboard closure	Packaging type	Thickness of board / Composition of quality
A - Sideluk	**B - 20 mm end protection**	**3 mm (B-flute, brown) / Min.: ECT 3,9 - Mul 350**

INSIDE MEASURE	L:	1061	B:	402	H:	166	Glue flap:	45	Measurements shown in mm.	BOX:	1 af 1	PAGE:	3/3

tvilum	**Kommode 5 skuffer**		INIT:	JR	DATE : 01-12-2014
	Nova		REVISION:	C	Approved by: *JR*
71200			DWG.NO.		71200-60